BOCCHI

BAVENO LUX 34D

UNDERMOUNT, HIDE-AWAY DOUBLE BOWL GRANITE KITCHEN SINK





COMPONENTS INCLUDED IN THE BOX:
2320 0016 Cutting Board Covers (HPL) (x2)
2320 0006 Cutting Board (Sapele Mahogany)
2310 0007 Colander
2350 0004 Roller Mat
2330 0005 Chrome Strainer (x2)
1600 0001 Undermount Installation Kit

COMPLIANCE CERTIFICATIONS:
Meets or Exceeds ASME A112.19.2.15 / CSA B45.5 / ANSI Z124.8

Product Code
1618-XXX-0126HP

FEATURES:
- Granite Composition: 80% natural granite and quartz micro-particles, 20% acrylic resin
- Sink is designed for undermount installation with a workstation ledge
- Designed to hide-away, when covers are in place, to create extended counter space; other accessories will self-store beneath the covers
- Black plastic bands on sides are designed to help stabilize the sink under the counter and will be completely hidden after installation
- 50/50 Double basin with low divide
- Pre-drilled for a center, single-hole faucet; additional faucet holes are pre-scored on the underside of the sink and may be easily punched out per the installation instructions
- 3-1/2 inch center drains
- Chrome Strainers and Select Workstation Accessories Included (listed below)
- Compatible with garbage disposals (not included)

WEIGHT: 48 lbs

AVAILABLE COLORS:

Matte Black (504)
Metallic Black (505)
Concrete Gray (506)
Milk White (507)
Mink (508)

DIMENSIONS:

Nominal Dimensions
34" x 20" x 9.5"

Bowl Inside Dimensions
31" x 16" x 9"

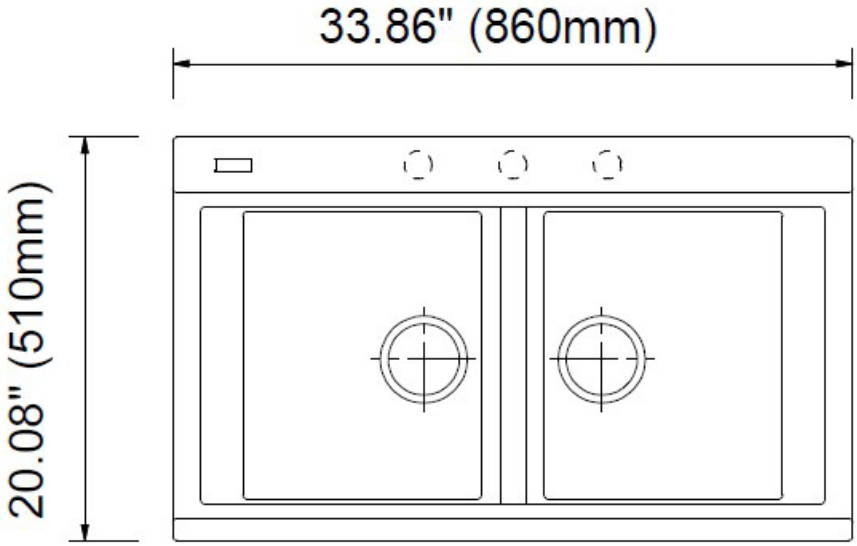

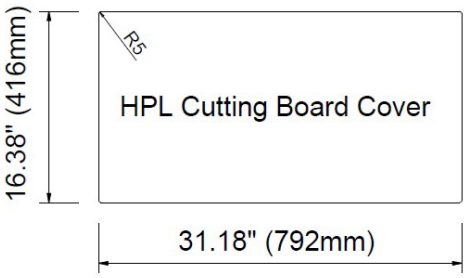

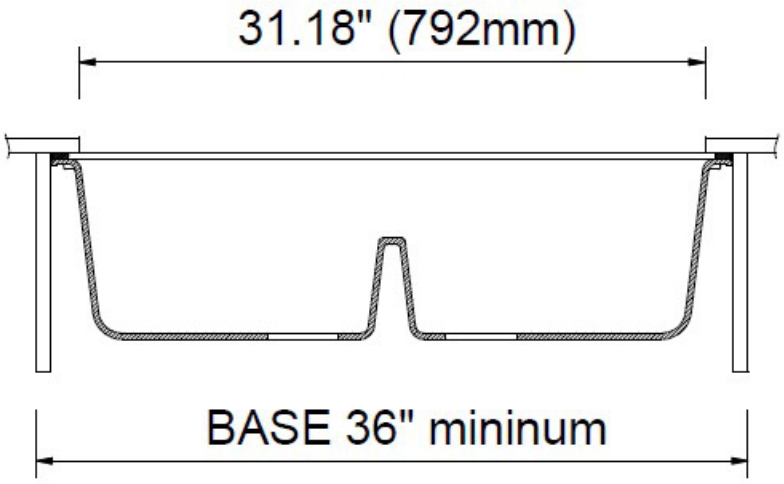

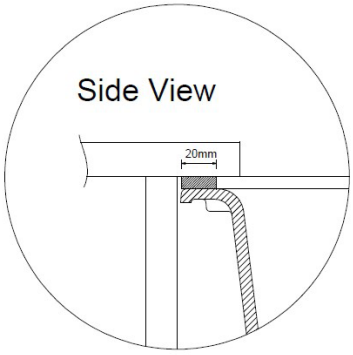

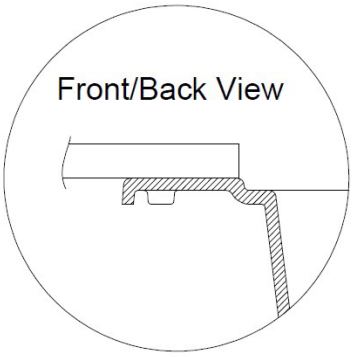

NOTES: Refer to installation instructions supplied with kitchen sink for undermount installations. Please use the actual sink that you will be installing, or the template in order to determine the cutout dimensions for your countertop.

CAUTION: Sink is heavy! Installer must use all the provided installation brackets and proper reinforcements as described in the installation instructions.

IMPORTANT: Dimensions of fixtures are nominal and may vary within the range of tolerance established by ANSI standards. These measurements are subject to change or cancellation. No responsibility is assumed for use of superseded or voided pages.