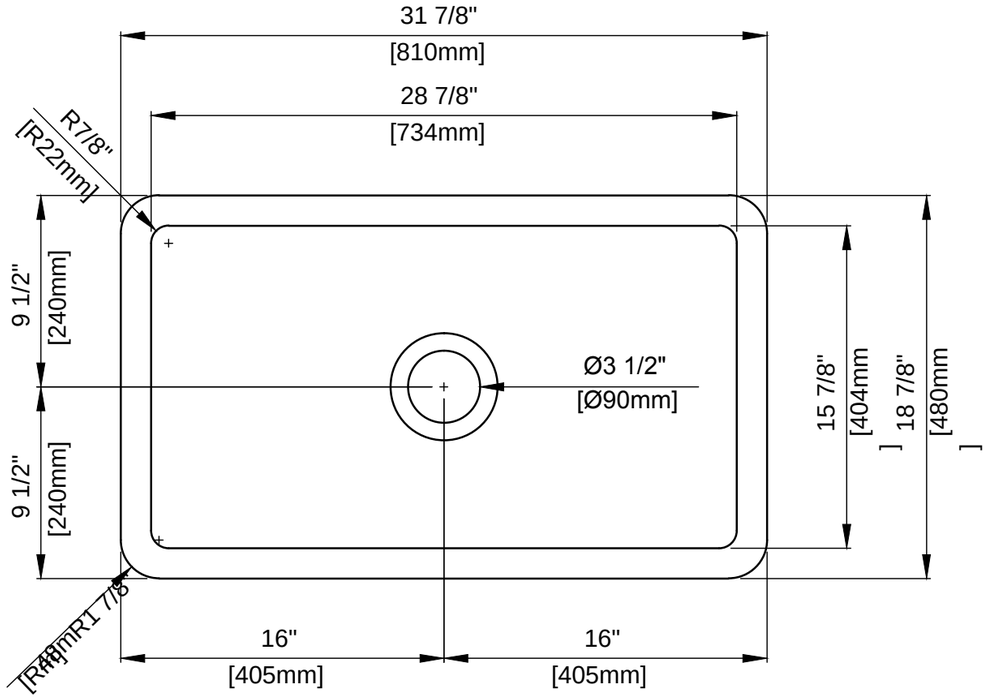
31 7/8"
[810mm]
28 7/8"
[734mm]
R7/8"
[R22mm]
9 1/2"
[240mm]
9 1/2"
[240mm]
Ø3 1/2"
[Ø90mm]
15 7/8"
[404mm
]
18 7/8"
[480mm
]
R1 7/8
[R48mm
]
16"
[405mm]
16"
[405mm]

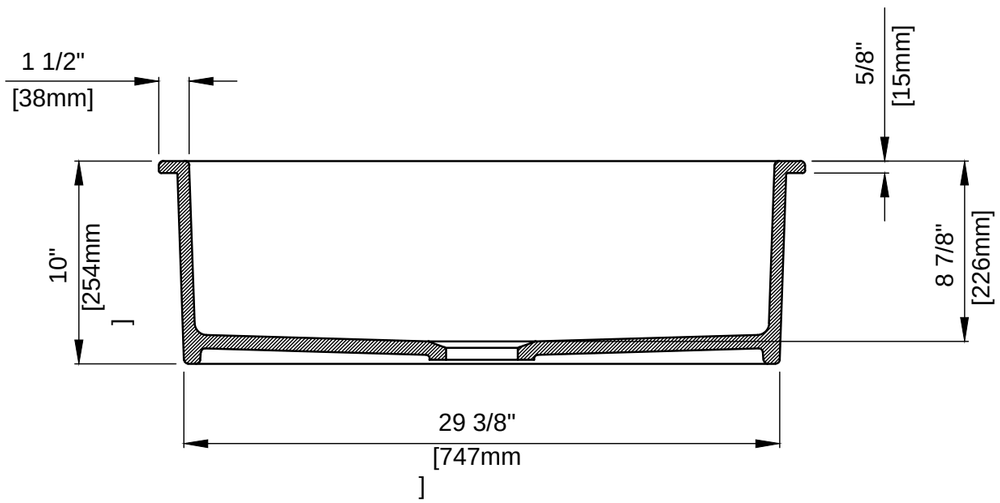
1 1/2"
[38mm]
5/8"
[15mm]
10"
[254mm
]
8 7/8"
[226mm]
29 3/8"
[747mm
]