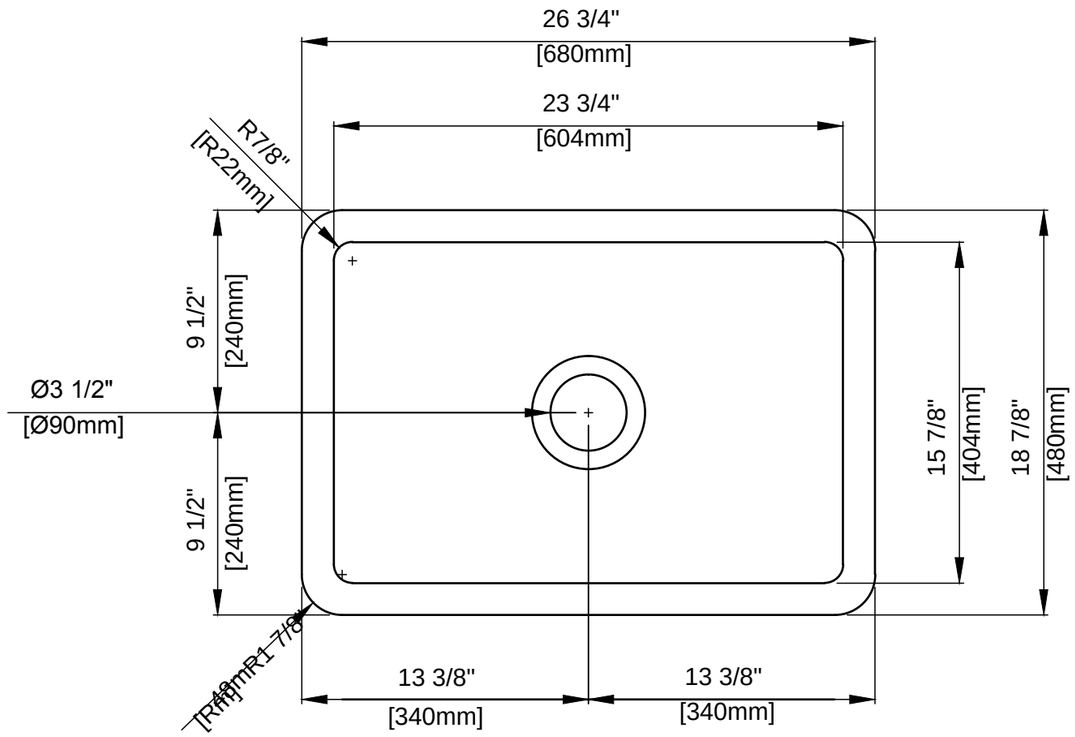
26 3/4"
[680mm]
23 3/4"
[604mm]
R7/8"
[R22mm]
9 1/2"
[240mm]
Ø3 1/2"
[Ø90mm]
9 1/2"
[240mm]
15 7/8"
[404mm]
18 7/8"
[480mm]
13 3/8"
[340mm]
13 3/8"
[340mm]

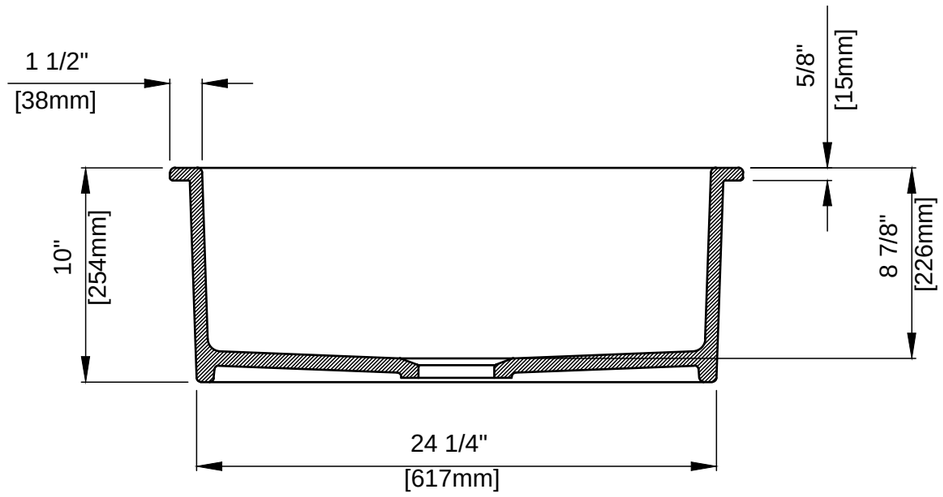
1 1/2"
[38mm]
5/8"
[15mm]
10"
[254mm]
8 7/8"
[226mm]
24 1/4"
[617mm]