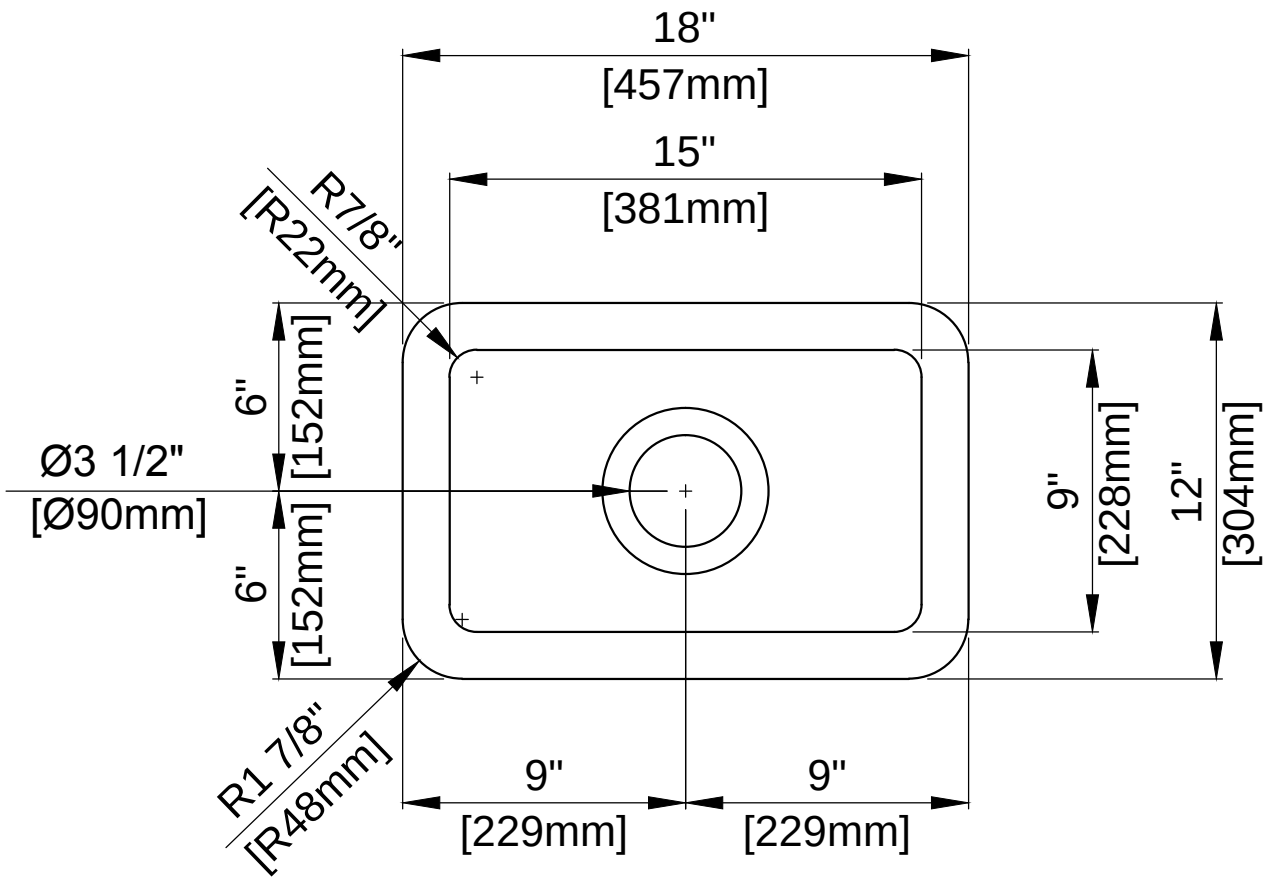
18"
[457mm]
15"
[381mm]
R7/8"
[R22mm]
6"
[152mm]
Ø3 1/2"
[Ø90mm]
6"
[152mm]
9"
[228mm]
12"
[304mm]
R1 7/8"
[R48mm]
9"
[229mm]
9"
[229mm]

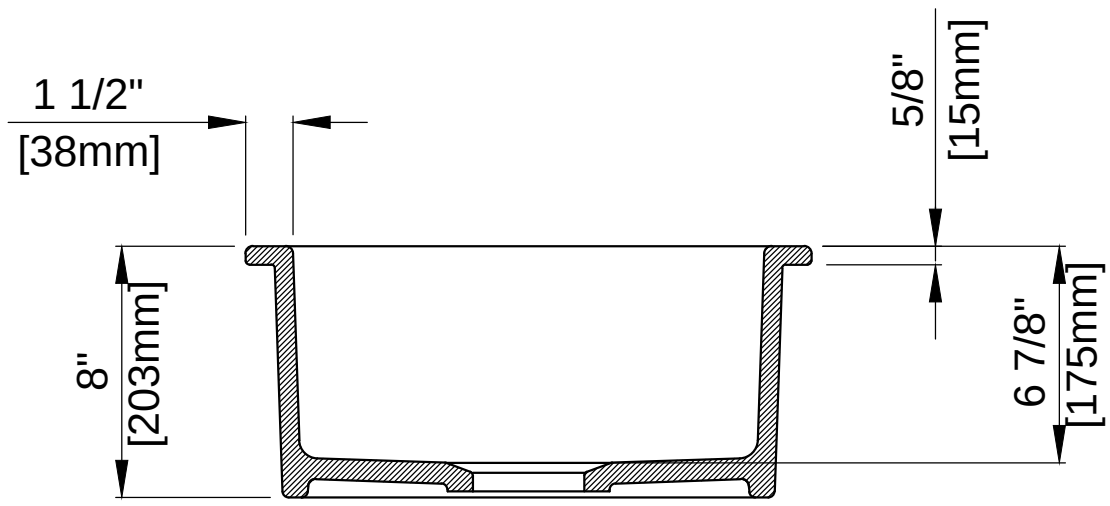
1 1/2"
[38mm]
5/8"
[15mm]
8"
[203mm]
6 7/8"
[175mm]