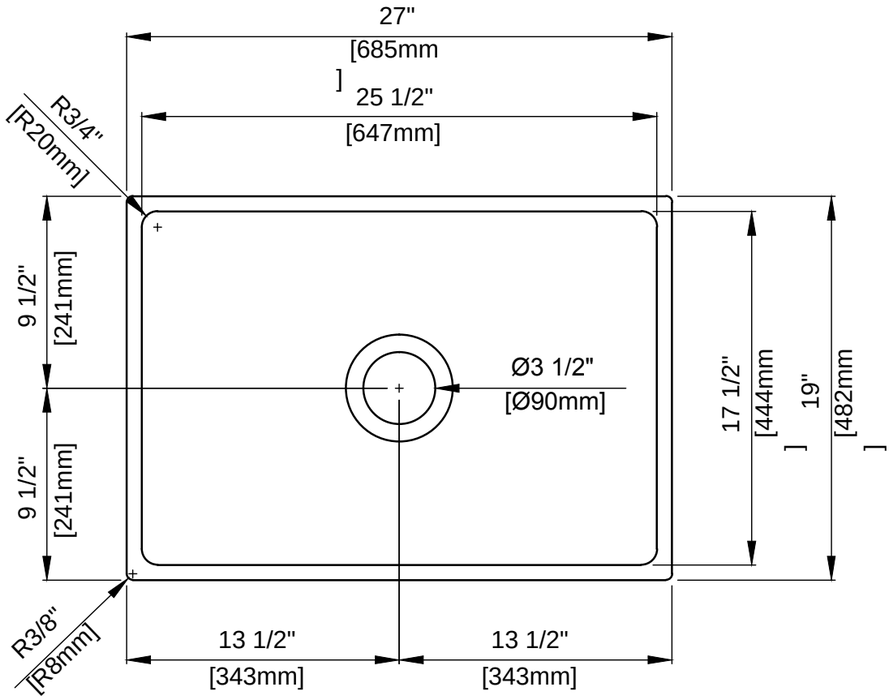
27"
[685mm
]
25 1/2"
[647mm]
R3/4"
[R20mm]
9 1/2"
[241mm]
Ø3 1/2"
[Ø90mm]
17 1/2"
[444mm
]
19"
[482mm
]
9 1/2"
[241mm]
R3/8"
[R8mm]
13 1/2"
[343mm]
13 1/2"
[343mm]

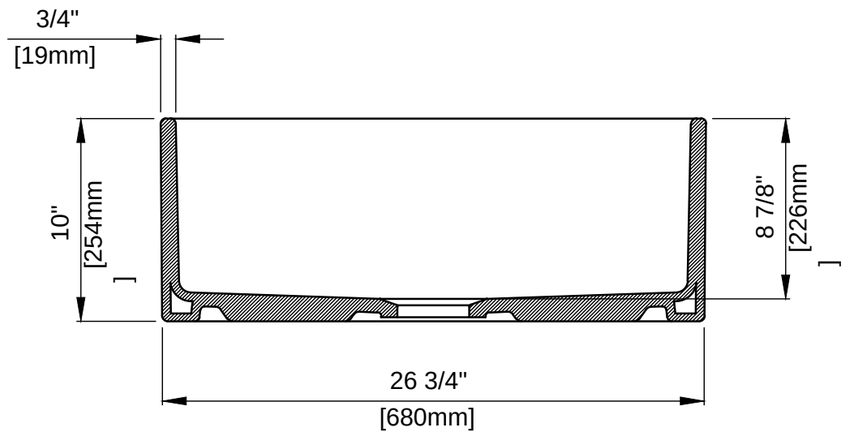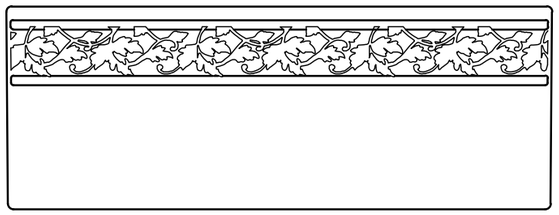
3/4"
[19mm]
10"
[254mm
]
8 7/8"
[226mm
]
26 3/4"
[680mm]