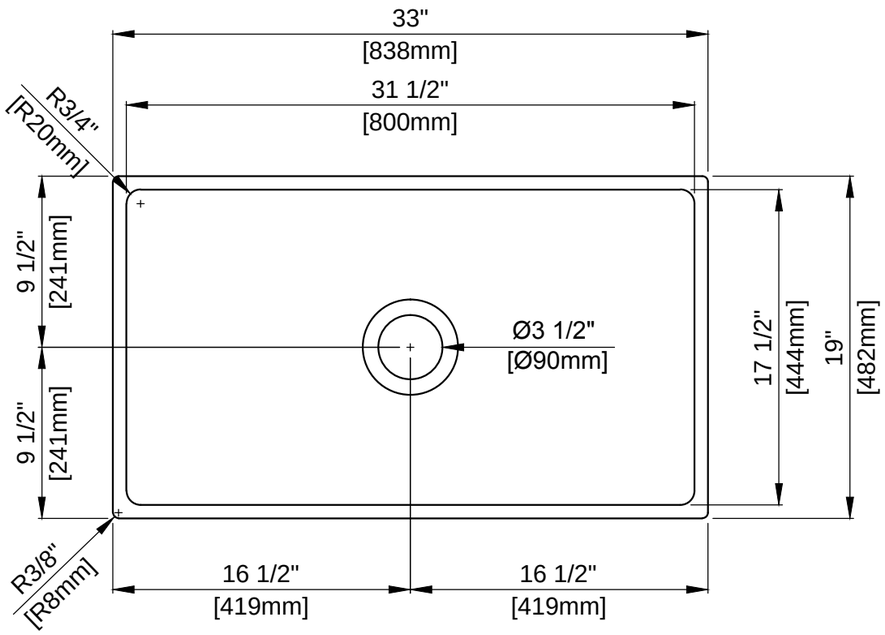
33"
[838mm]
31 1/2"
[800mm]
R3/4"
[R20mm]
9 1/2"
[241mm]
9 1/2"
[241mm]
Ø3 1/2"
[Ø90mm]
17 1/2"
[444mm]
19"
[482mm]
R3/8"
[R8mm]
16 1/2"
[419mm]
16 1/2"
[419mm]

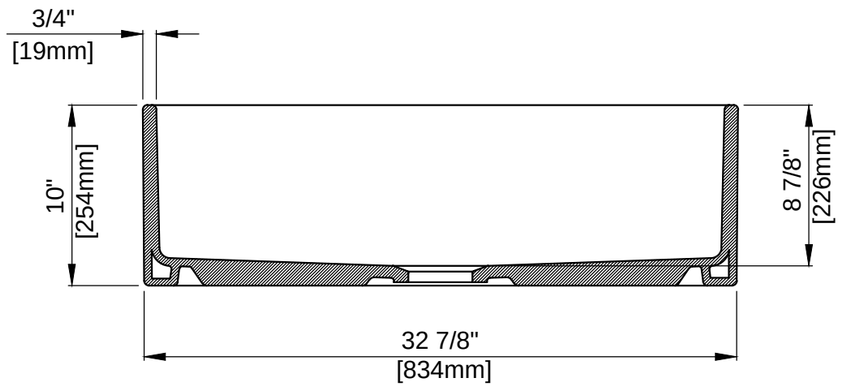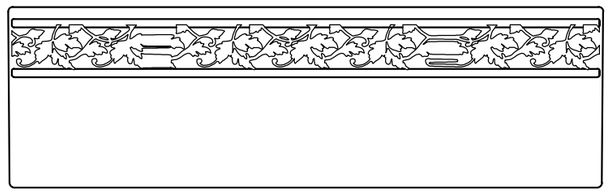
3/4"
[19mm]
10"
[254mm]
8 7/8"
[226mm]
32 7/8"
[834mm]