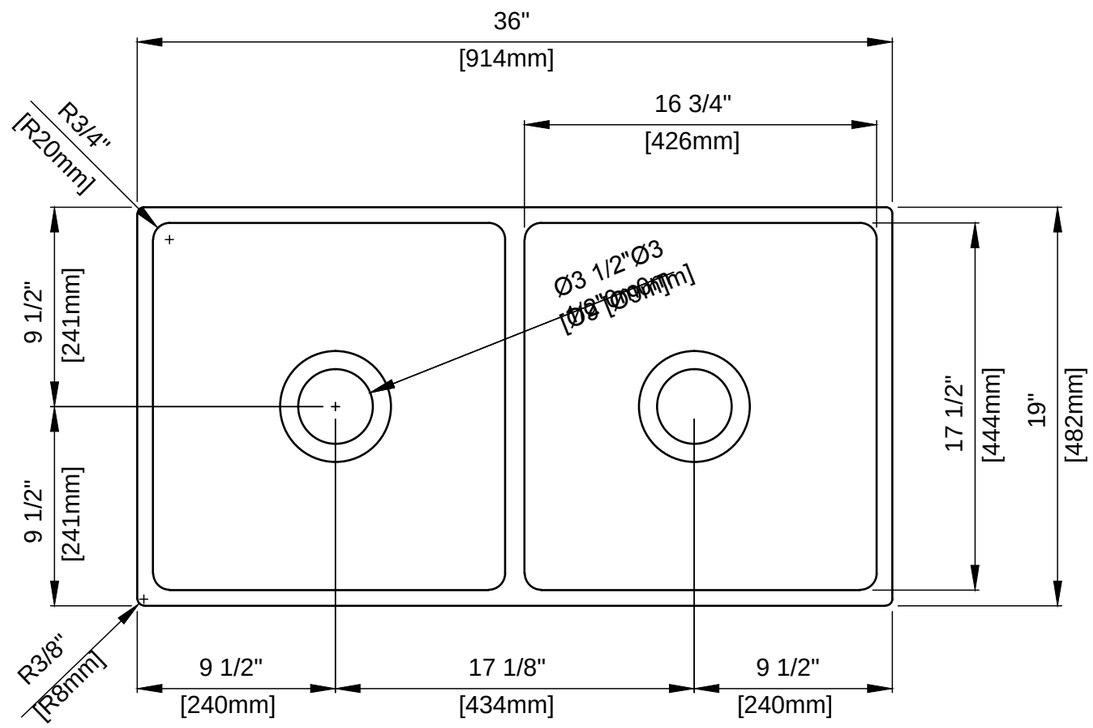
36"
[914mm]
16 3/4"
[426mm]
R3/4"
[R20mm]
9 1/2"
[241mm]
9 1/2"
[241mm]
Ø3 1/2"Ø3
17 1/2"
[444mm]
19"
[482mm]
R3/8"
[R8mm]
9 1/2"
[240mm]
17 1/8"
[434mm]
9 1/2"
[240mm]

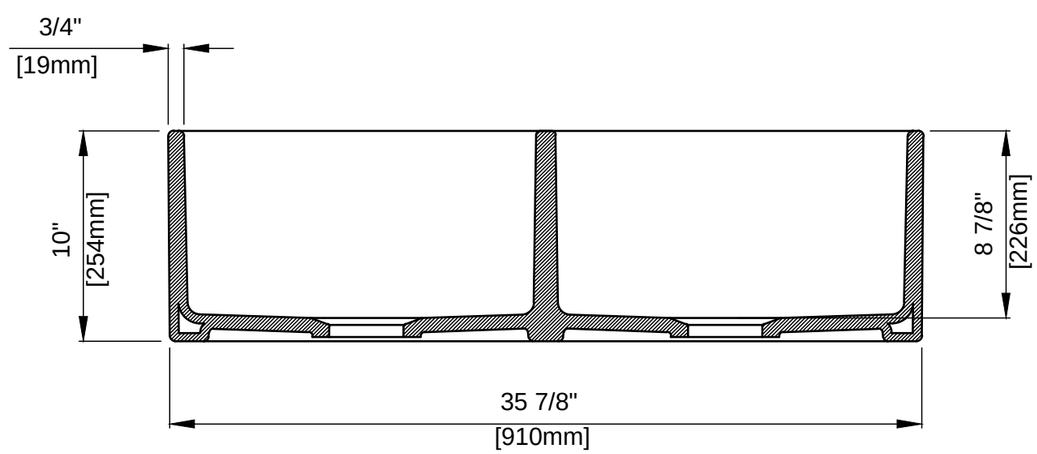
3/4"
[19mm]
10"
[254mm]
8 7/8"
[226mm]
35 7/8"
[910mm]