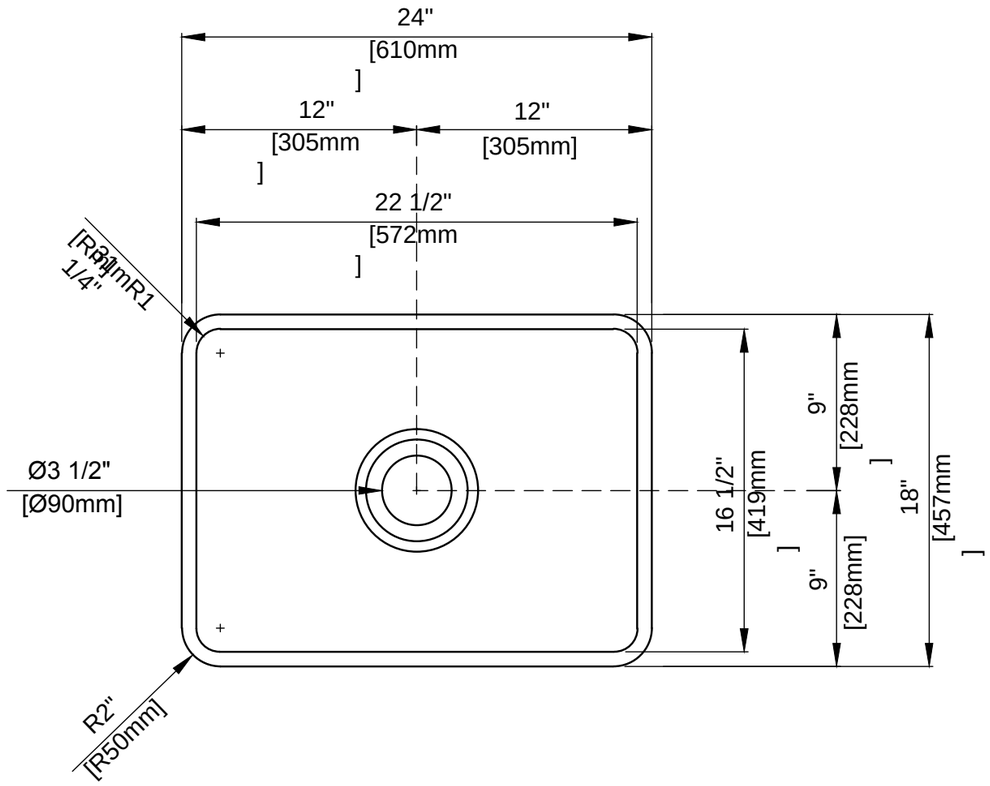
24"
[610mm
]
12"
[305mm
]
12"
[305mm]
22 1/2"
[572mm
]
[R31mm
1/4"
R1
Ø3 1/2"
[Ø90mm]
16 1/2"
[419mm
]
9"
[228mm
]
9"
[228mm]
18"
[457mm
]
R2"
[R50mm]

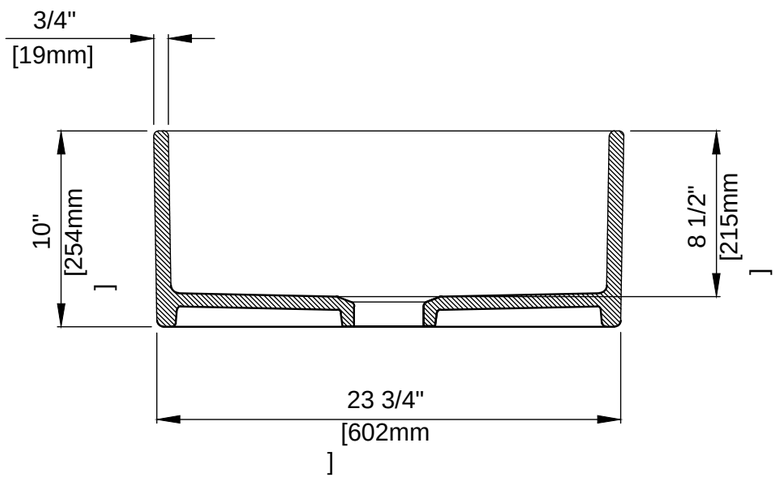
3/4"
[19mm]
10"
[254mm
]
8 1/2"
[215mm
]
23 3/4"
[602mm
]