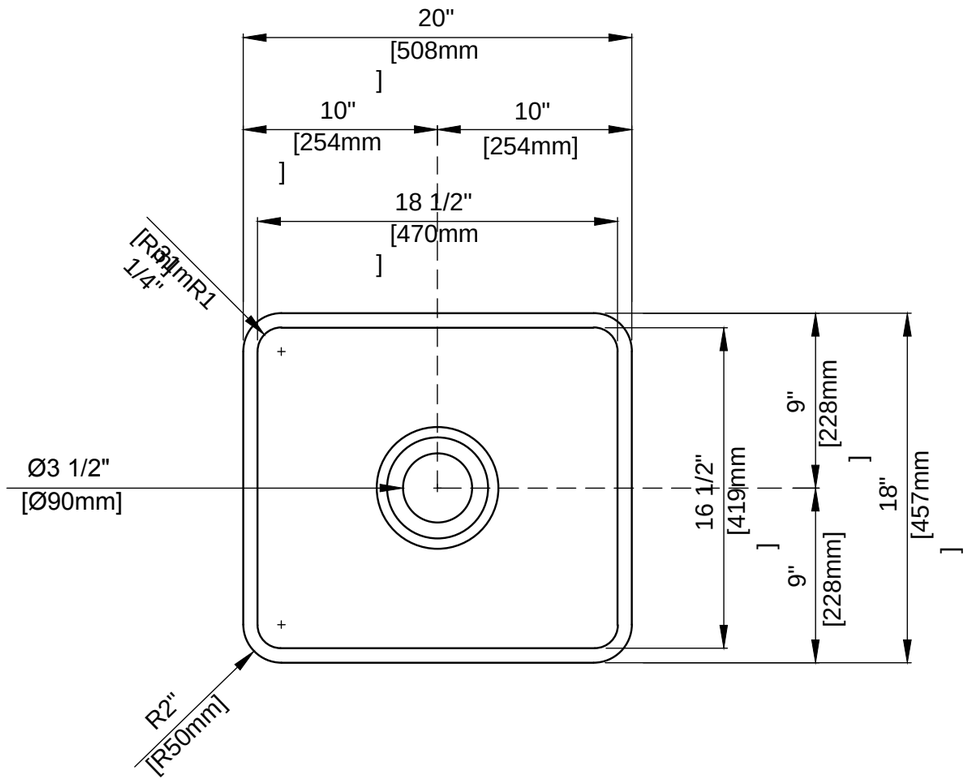
20"
[508mm
]
10"
[254mm
]
10"
[254mm]
18 1/2"
[470mm
]
[R31mR1
1/4"
Ø3 1/2"
[Ø90mm]
16 1/2"
[419mm
]
9"
[228mm
]
9"
[228mm]
18"
[457mm
]
R2"
[R50mm]

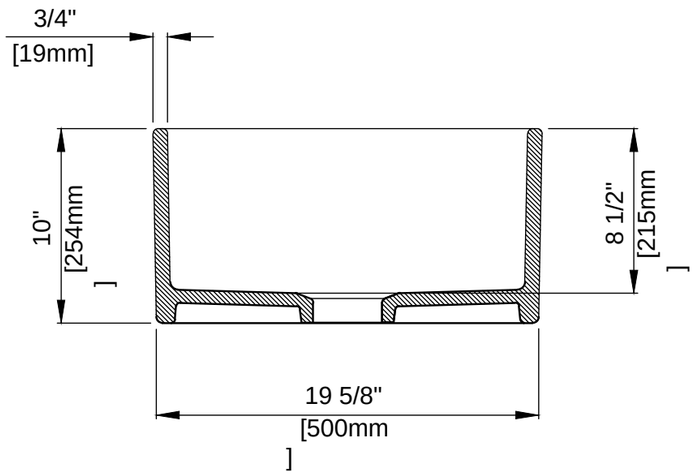
3/4"
[19mm]
10"
[254mm
]
8 1/2"
[215mm
]
19 5/8"
[500mm
]