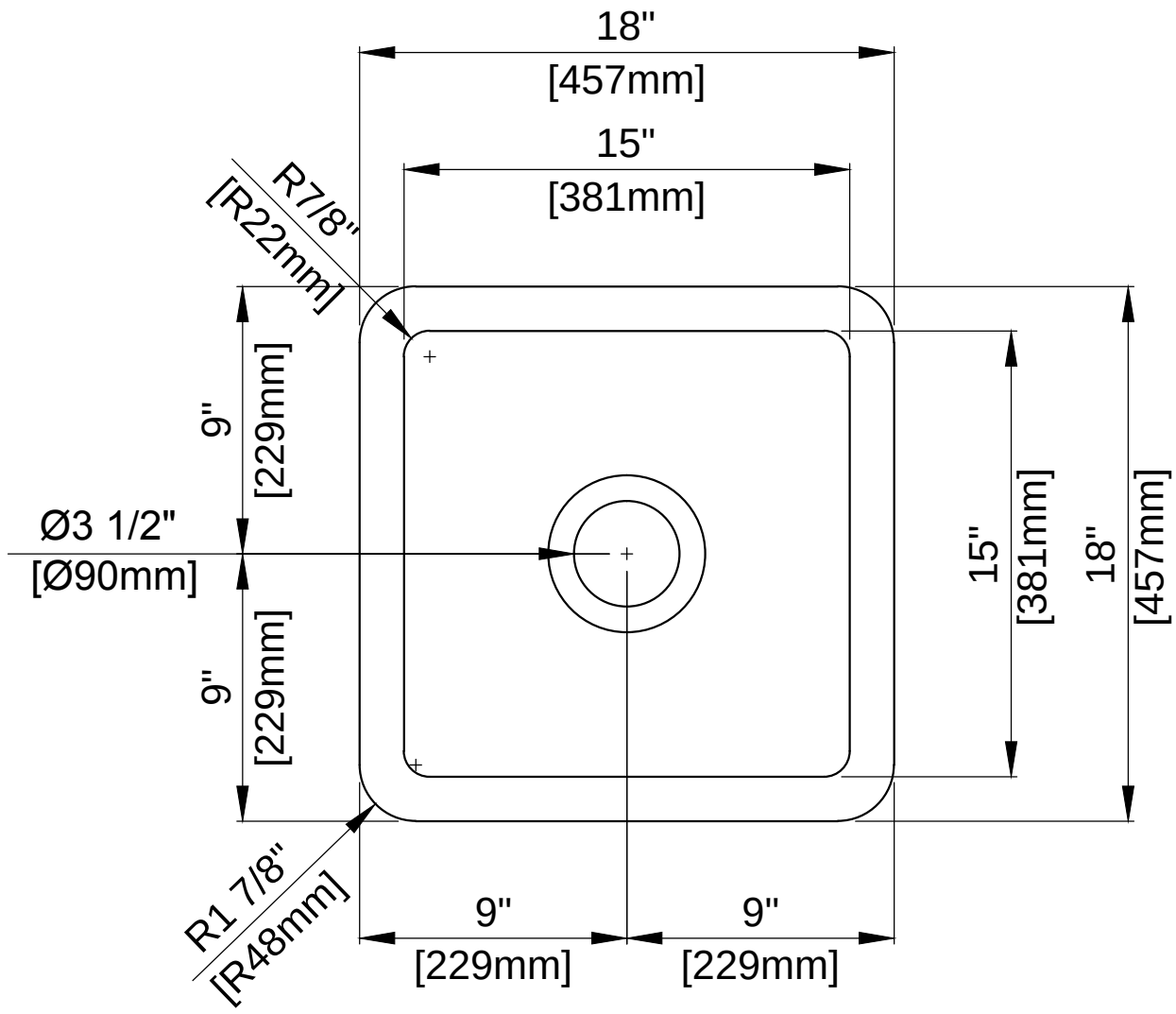
18"
[457mm]
15"
[381mm]
R7/8"
[R22mm]
9"
[229mm]
Ø3 1/2"
[Ø90mm]
9"
[229mm]
15"
[381mm]
18"
[457mm]
R1 7/8"
[R48mm]
9"
[229mm]
9"
[229mm]

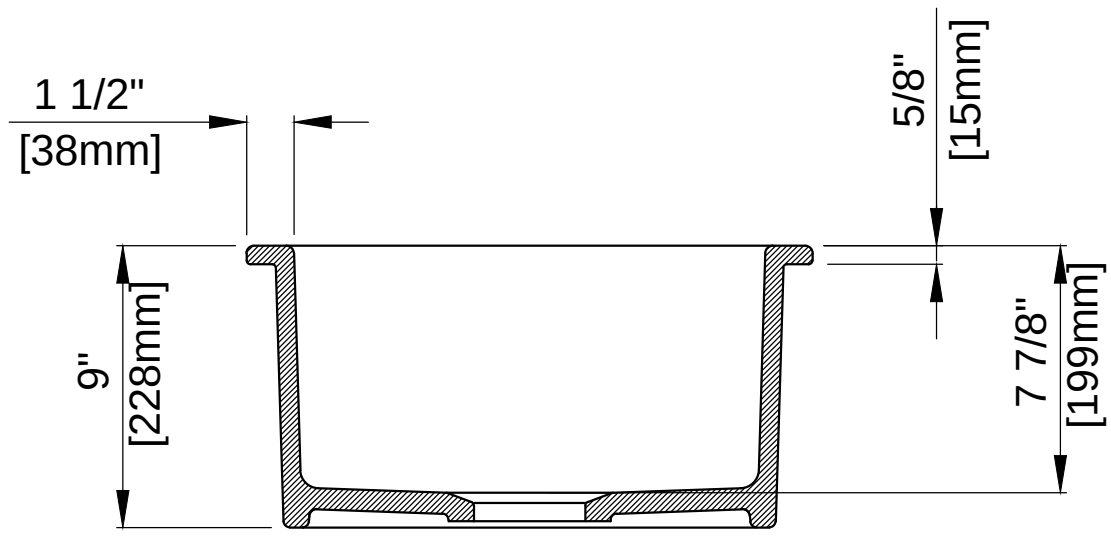
1 1/2"
[38mm]
5/8"
[15mm]
9"
[228mm]
7 7/8"
[199mm]