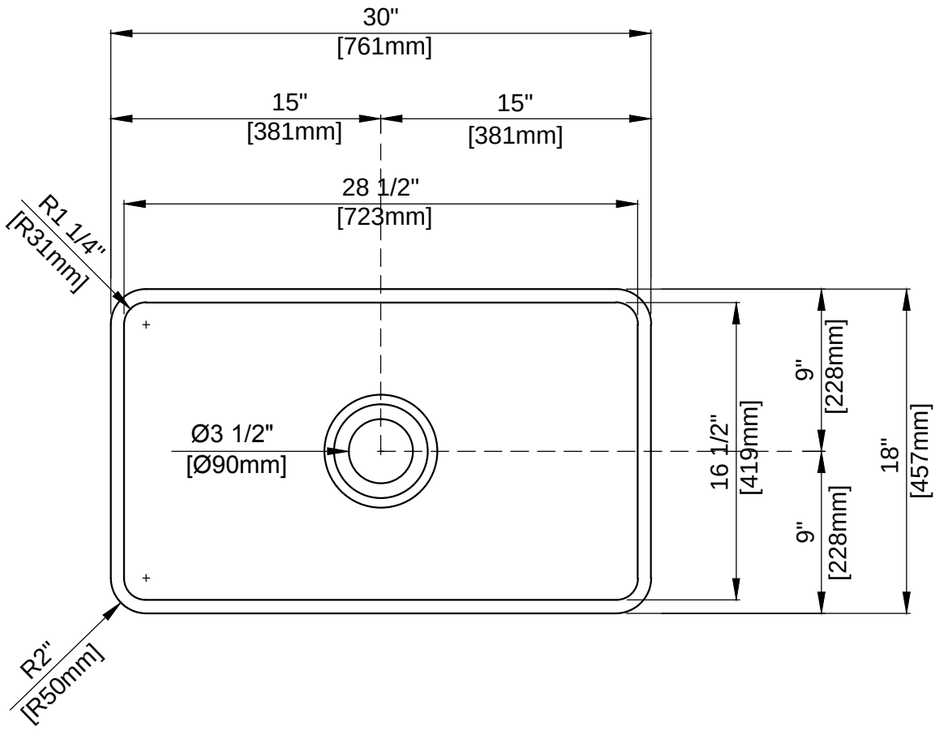
30"
[761mm]
15"
[381mm]
15"
[381mm]
28 1/2"
[723mm]
R1 1/4"
[R31mm]
Ø3 1/2"
[Ø90mm]
16 1/2"
[419mm]
9"
[228mm]
9"
[228mm]
18"
[457mm]
R2"
[R50mm]

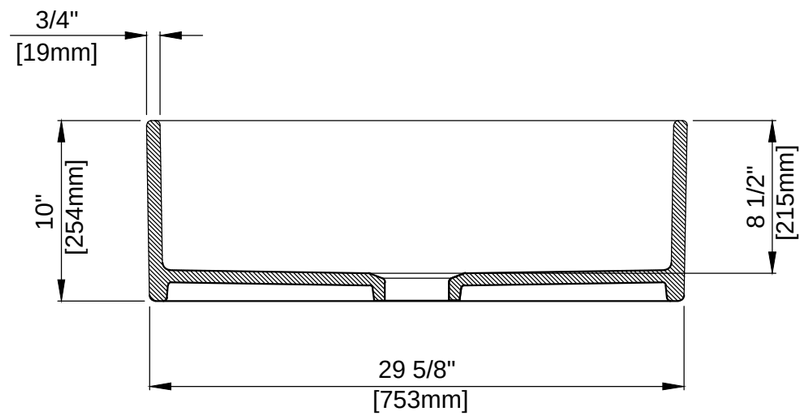
3/4"
[19mm]
10"
[254mm]
8 1/2"
[215mm]
29 5/8"
[753mm]